CANTER 816T

WIDE CAB TIPPER
DUONIC / MANUAL | 4x2

FEC81CR3SFBG(T) / FEC81CR4SFBG(T)

TECHNICAL DRAWING

PLEASE NOTE: PRINT AT 100% SIZE FOR SCALE

30mm = 1m

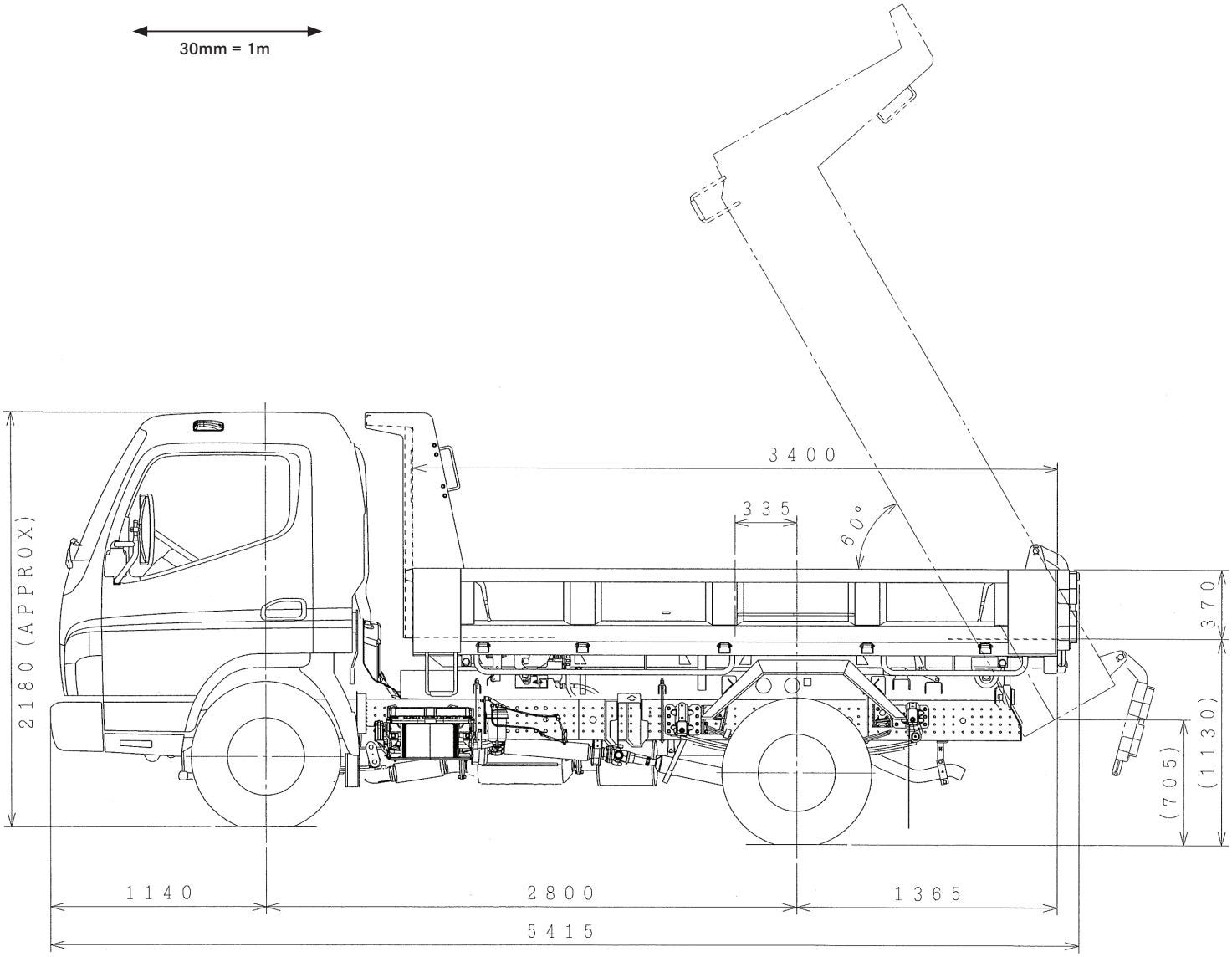

A policy of continual improvement means that specifications detailed in this brochure are subject to change without notice. Contact your authorised Fuso dealer to confirm current specifications. Fuso is a registered trademark of Mitsubishi Fuso Truck & Bus Corporation. Copyright © Fuso NZ (2024)